Efficient Data Collection Over Multiple Access Wireless Sensors Network

Alejandro Cohen, *Member, IEEE*, Asaf Cohen, *Member, IEEE*, and Omer Gurewitz, *Member, IEEE*

Dedicated in memory of Aviad Firuz (R.I.P.)

***Abstract*— Data collection in Wireless Sensor Networks (WSN) draws significant attention, due to emerging interest in technologies ranging from Internet of Things (IoT) networks to simple "Presence" applications, which identify the status of the devices (active or inactive). Numerous Medium Access Control (MAC) protocols for WSN, which can address the challenge of data collection in dense networks, were suggested over the years. Most of these protocols utilize the traditional layering approach, in which the MAC layer is unaware of the encapsulated packet payload, and therefore there is no connection between the data collected, the physical layer and the signaling mechanisms. Nonetheless, in many of the applications that intend to utilize such protocols, nodes may need to exchange very little information, and do so only sporadically, that is, while the number of devices in the network can be very large, only a subset wishes to transmit at any given time. Thus, a tailored protocol, which matches the signaling, physical layer and access control to traffic patterns is required. In this work, we design and analyze a data collection protocol based on information theoretic principles. In the suggested protocol, the sink collects messages from up to K sensors simultaneously, out of a large population of sensors, without knowing in advance which sensors will transmit, and without requiring any synchronization, coordination or management overhead. In other words, neither the sink nor the other sensors need to know who are the actively transmitting sensors, and this data is *decoded* directly from the channel output. We provide a simple codebook construction with very simple encoding and decoding procedures. We further design a secure version of the protocol, in which an eavesdropper observing only partial information sent on the channel cannot gain significant information on the messages transmitted or even which are the sources that sent these messages.**

***Index Terms*— Internet of Things (IoT), medium access control (MAC), wireless sensor networks (WSN), group testing (GT), data collection.**

I. Introduction

UTILIZING scattered Wireless Sensor Networks (WSN) for gathering environmental information from a large number of sensor nodes with limited capabilities continues to draw a lot of attention from both industrial and academic communities, due to the large number of applications that rely on such infrastructures. For example, WSN will be a crucial technology enabler for implementation in the emerging Internet of Things (IoT) environment [1], which will allow collection of information from densely deployed sensors, many of which are cheap with very limited capabilities (e.g., memory or energy resources) and compete for limited wireless resources (e.g., time or spectrum). In many of these applications, the majority of the sensors need to report only a limited amount of information, and do so only infrequently. For example, many of these sensors need to periodically send a keep alive message to inform the sink node that their battery has not drained out, and occasionally report one of several possible events, e.g., motion detected, temperature is above a given threshold, or one out of several quantized values. Accordingly, the main challenge for such networks is to cope with a huge number of simple devices that need to send limited information, competing for very limited wireless resources (compared to the number of sensors) while saving energy.

Numerous Medium Access Control (MAC) protocols for WSN have been suggested over the years, designed to cope with various setups and objectives (a short representative overview is provided in Section III). In particular, traffic in a WSN can be quite dynamic, depending on the events being sensed, the sensing application and the protocols being used. Therefore, such protocols should perform well under a wide range of traffic loads, a variety of network topologies and various objectives such as latency, reliability, energy consumption, security, etc. Accordingly, many of these MAC protocols were designed and examined to be robust under diverse setups. The approach of designing a MAC protocol regardless of the wireless Phy-protocol being used, the routing protocol employed, and even the application expected to utilize it, is consistent with the network-layering conceptual model. However, even though these protocols perform well under a large variety of setups, this universality comes at a price. For example, a MAC protocol allowing any subset of the sensors, regardless of its size, to transmit simultaneously will suffer from many collisions and high overhead if indeed a large subset attempts transmission concurrently. Another example is a *keep alive* frame transmitted over WiFi, that conveys only the sender ID and a single bit of relevant information (the sensor is alive), yet requires a large number of bits to be transferred due to headers, physical encapsulation, etc.

In this paper, we design, analyze and evaluate a highly efficient WSN MAC protocol specially designed to collect information from a large number of sensors, utilizing information theoretic concepts and novel signaling and decoding techniques which allow us to jointly optimize all layers together. We assume the sensors are very simple, with highly constrained capabilities, e.g., no power control, rate adaptation mechanisms or sophisticated algorithmic capabilities. Thus,

Manuscript received October 15, 2018; revised September 21, 2019; accepted December 16, 2019; approved by IEEE/ACM Transactions on Networking Editor B. Krishnamachari. Date of publication February 3, 2020; date of current version April 16, 2020. This work was supported in part by the NSF under Grant CNS-1824529. Parts of the secure protocol design were presented at the International Symposium on Cyber Security, Cryptography and Machine Learning, CSCML 2018. *(Corresponding author: Alejandro Cohen.)*

The authors are with the Department of Communication Systems Engineering, Ben-Gurion University of the Negev, Beer-Sheva 84105, Israel (e-mail: alejandr@post.bgu.ac.il; coasaf@bgu.ac.il; gurewitz@bgu.ac.il).

This article has supplementary downloadable material available at http://ieeexplore.ieee.org, provided by the authors.

Digital Object Identifier 10.1109/TNET.2020.2964764

1063-6692 © 2020 IEEE. Personal use is permitted, but republication/redistribution requires IEEE permission.
See https://www.ieee.org/publications/rights/index.html for more information.

Authorized licensed use limited to: Hohai University Library. Downloaded on May 08,2024 at 03:53:51 UTC from IEEE Xplore. Restrictions apply.

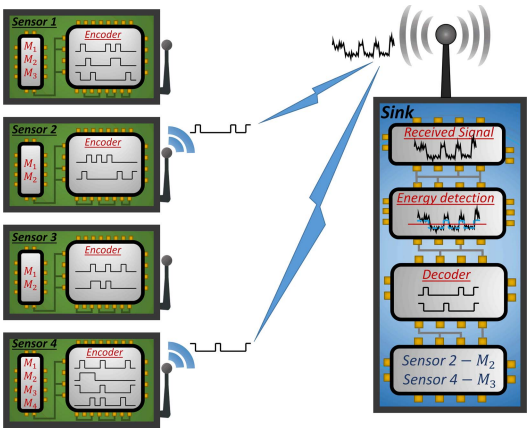

Fig. 1. A schematic illustration of an IoT network. Data is collected by a sink, when K sensors, out of a large population of N sensors in the network have a message to transmit over the wireless channel.

the key idea that our protocol relies on, is that instead of the typical frame mechanism using data encapsulation, each sensor is assigned a unique *transmission pattern* for each of its messages, which conveys both the information and the sensor's ID. Whenever a sensor wishes to transmit a report, it waits to receive a predefined periodic preamble sent by its designated sink, and then transmits a sequence of *impulses* according to the transmission pattern which corresponds to the report it wishes to send. The sink node *can receive and decode several simultaneous transmissions in a way that it can recognize both the sender and the information sent* from the collected channel output received. Namely, a collision resolution procedure or scheduling ([2]) are not required to decode the K simultaneously transmission. This is done using a carefully designed codebook, and a matching decoding algorithm that identifies both the sensors which transmitted as well as their codewords. Interestingly, unlike Code-Division Multiple-Access Channels (CDMA), the sink node can rely on a simple energy detection in order to decode, and not on the exact received power or any power adaptation mechanism, thus dramatically improving robustness.

To provide some insight into the suggested approach and illustrate its basic concept, consider the toy example depicted in Figure 1. In this example, we assume four sensors transmitting to a sink. The four sensors have $3, 2, 2$ and 4 messages each. Each one of the messages is assigned a unique pattern, comprised of high and low level elements which are known to the sensor itself and to the sink. For example, Sensor 1's first message is encoded starting with a low level symbol followed by a high level symbol, a sequence of 4 low level symbols, etc. After receiving a predefined beacon from the sink, which initiates a conceptual set of mini-timeslots, each sensor ready to transmit emits energy (transmits) according to the pattern assigned to the message to be transmitted. Specifically, it emits energy in the minislots which correspond to a high level in the message pattern and stays idle in the other minislots. In the above example only two sensors are awake and ready to transmit (sensors 2 and 4). Sensor 2 emits energy in minislots $2, 8$ and 11 according to the pattern assigned to its second message, and Sensor 4 emits energy in minislots $1, 6$ and 11 according to the pattern assigned to its third message. The received signal at the sink is a combination of the two transmitted sequences (energy at minislots $1, 2, 6, 8$ and 11, with some additional noise). The sink performs an energy detection procedure on the received signal according to a predefined threshold, identifying which minislots were busy and which were idle (below the energy threshold). Note that due to the energy aggregate, the receiver gain can be saturated (e.g., several sensors emitted energy into the same minislot) yet all the sink needs to identify is on which minislots the energy is above the noise level (above the threshold). In other words, each minislot should be at a length sufficient to decode one bit and the sink cares only about the Boolean sum of the "bit" patterns used by the transmitting sensors. Based on the filtered sequence (the energy detection sequence in the figure) the sink deduces which set of transmitted sequences could have generated the sequence received. In this example, there is no single sequence that can result in the received sequence; the only two sequences that can be combined into the received signal are the sequences corresponding to the second message of Sensor 2 and the third message of Sensor 4. Any other combination of sequences would result in a mismatch between the expected and the actual minislot energy levels. Note that even though in this toy example a simple Time Division Multiple Access (TDMA), which assigns each message a unique minislot can also work, in reality, where the overall number of sensors is high, such a solution *requires many minislots (linear in the number of sensors) regardless of the actual number of sensors transmitting in each round*. Assuming the number of sensors expected to transmit is moderate, the solution we suggest in the sequel requires *only a logarithmic number of minislots*, improving air time utilization and reducing the burden of contention for channel access and collision resolution procedures.

Another major challenge that our protocol can be easily modified to address is privacy and secrecy. In many such networks the information sent by the sensors is meant to be secure or private, i.e., we require that an eavesdropper (Eve) or an unintended addressee will not be able to decode the information, and sometimes not even identify the sender. Note that in the setup described above, since the sensors have limited information, identifying even the identity of the sending sensor may convey a lot of information, hence, in such cases, encryption is not very efficient. In this paper, we propose an enhancement to the suggested protocol, such that an eavesdropper receiving only parts of the channel output, is kept ignorant both of the content of the message and of the identity of the senders, at the expense of a small enlargement of the patterns allocated for each message, depending on the level of secrecy required.

In particular, the contributions of this work are as follows:

- We present a new MAC protocol, for data collection from dense wireless sensor networks, in which the sensors are expected to transmit only sporadically, and only a predefined amount of information (one out of a bank of possible messages per sensor[1]). In the suggested protocol, the sink can collect up to K reports simultaneously without any management or scheduling.
- We present a downlink version of the protocol as well, suitable for data dissemination from a sink to a set of K out of N sensors simultaneously, without any

[1]In case the amount of information that each sensor wants to transmit is high, the protocol can divide the messages to small blocks of symbols, which will reduce the possible number of sequences each sensor has at its bank, i.e., will limit the number of minislots required per transmission of a block. Corollary 1 and Remark 1 elaborates on this issue.

Authorized licensed use limited to: Hohai University Library. Downloaded on May 08,2024 at 03:53:51 UTC from IEEE Xplore. Restrictions apply.

management overhead, a predefined schedule or even a message notifying the relevant set of sensors.

- To support the protocols, we provide a codebook construction with a very simple encoding and decoding procedure, such that not only the code is efficient but also the transmitted codewords are self-contained and do not require headers, trailers or sender identity. Moreover, we suggest effective decoding algorithms based on Column Matching [3].
- We extend the single hop setup considered throughout the paper a to multi-hop setup in which a message needs to traverse multiple hops (pass through multiple relays) before reaching its designated sink.
- We present a secure version of the suggested uplink protocol, in which an eavesdropper receiving only part of the channel output cannot decode the messages or even identify the senders. Effective decoding algorithms are given as well. The size of the sequences in the secure version is the size of the sequences required in the non-secure protocol, multiplied by $1/(1-\delta)$, where δ is the fraction of the channel outputs (minislots) that the eavesdropper can obtain.
- We consider advance techniques for wireless transmission, in which the devices in the protocol suggested use OFDMA with BPSK modulator.
- We present a rigorous analysis, proving the reliability of the protocols as well as establishing sufficiency bounds on the parameters, for both the unsecured and secured versions. Specifically, given the total number of sensors, the maximal number of different messages each sensor can have and the maximal number of simultaneous transmissions that the sink can decode, we provide bounds on the size of the codewords. We evaluate the potential gains of utilizing our scheme and present numerical results which confirm our analytical results.

The structure of this work is as follows. In Section II, the system model is described. In Section III, we summarize the related work. In Sections IV and V the protocol is described. Section VI includes the code construction and the decoding procedure. In Section VII, an efficient decoding algorithm is described. In Section VIII, we analyze the effects of a noisy channel and possible solutions. In Section IX, the multi-hop setup considered. Section X gives simulation results of the WSN and SWSN protocols, while in Section XI we evaluate the potential gains of utilizing our scheme. Section XII describes an implementation of the protocol on off-the-shelve, simple sensors. Section XIII concludes the paper. In Appendix A, an analogous data dissemination protocol is described. Appendix B includes the code construction and the decoding procedures of the SWSN model. In Appendix C, we consider an OFDMA extension. In Appendix E we provide numerical results.

II. System Model

We assume a dense wireless sensor network that harvests data from the area covered by the network. The network consists of multiple sinks (cluster heads) each collecting reports from a large set of sensors independently. Throughout the paper, we will focus on a single such cluster consisting of a large set of wireless sensors, denoted by $\mathcal{N}$, and a single sink. We denote by $N = |\mathcal{N}|$ the total number of sensors in the network (cluster). We assume that all sensors are connected to the sink node, *but only in the following limited sense.* First, beacons by the sink should be heard by all sensors. Then, in our upstream model (from the sensors to the sink) it is sufficient for the sink to be able to detect only whether there were transmissions (one or more) on the channel. For example, whether the received SNR is above a threshold. The sink *does not necessarily need to decode any information from a single transmission from a single sensor*, and the received SNR is not necessarily above a decodable threshold. Specifically, we assume that in order to identify transmissions on the channel, the sink simply employs an energy detection mechanism (similar to traditional "carrier sense") in which it can recognize whether there is a transmission on the channel or not, yet it cannot identify the exact number of such simultaneous transmissions, and certainly cannot directly decode information from them.

We assume that each sensor i has C_i different messages it can transmit. There are no restrictions on the message length each sensor holds in its message bank. There are also no constraints on the message content each sensor has. For simplicity we will assume throughout the paper that $C_i = C, \forall i$. Nonetheless, an extension to different C_i's is straightforward. We further assume that each sensor needs to transmit a message sporadically. In particular, we will assume that the sensors employ a duty cycle mechanism in which they randomly wake up and transmit a message unless they have an urgent message they need to transmit, in which case they wake up instantly waiting for transmission opportunity. We assume that the wakeup times including the urgent report instances are arranged such that the probability that more than K sensors are awake at the same time waiting for transmission opportunity is very low. *Note that we have no restriction on K (i.e., $K \leq N$), however, we emphasize that the smaller K is compared to N, the more efficient is the protocol we suggest.*

In the second part of the paper, we address a secure version, in which we assume that an eavesdropper is present, and observes a noisy version of what is received by the sink node. In particular, we assume that the eavesdropper has the exact same abilities as the sink including knowledge of all necessary codes, yet it can observe the channel only a δ fraction of the time; specifically the eavesdropper listens to (observes) the activity on the channel with probability δ and does not listen with probability $1-\delta$, e.g., if the time is slotted, the probability that the eavesdropper will observe or not observe the activity on the channel per slot is δ and $1-\delta$, respectively. Note that this model is similar to the common erasure channel (or packet erasure channel) but the erasures are on the channel activity and not on a bit (or a packet).

III. Related Works

We divide the discussion on related works into two parts. In the first, we provide a brief overview of several multipurpose WSN MAC protocols. Then, since our protocol is inspired by the classical Group Testing (GT) approach, in the second part we give a brief overview of related GT results.

WSN MAC Protocols: Since on the one hand, one of the foremost objectives of WSN is energy conservation, and on the other sensor nodes are expected to report only sporadically (and many of the reports can tolerate a short delay), most of the MAC protocols which were designed for WSN over the past decade and a half rely on a duty cycling technique in

Authorized licensed use limited to: Hohai University Library. Downloaded on May 08,2024 at 03:53:51 UTC from IEEE Xplore. Restrictions apply.

which each sensor node turns its radio on only periodically, alternating between active and sleeping modes [4]–[6]. Such protocols took different approaches to address the rendezvous challenge in which a sender and a receiver should be awake at the same time in order to exchange information. In the synchronous approach, nodes' active and sleeping periods are aligned, i.e., all sensor nodes are active at the same time intervals and are required to contend for transmission opportunities during these intervals, e.g., [7]–[9]. The asynchronous approach allows sensor nodes to choose individual wakeup times, maintaining unsynchronized duty-cycles, and employing various strategies to detect transmissions in the network and enable rendezvous between senders and receivers, e.g., [10]–[12]. However, all these protocols are designed to support various types of traffic patterns, diverse topologies (e.g., single and multi-hop topologies) and most importantly, to support any kind of information exchange between the sensors. Accordingly, they have adopted the traditional approach in which the proposed channel access mechanism is independent from the message payload exchange between the sensor nodes, *at the price of data encapsulation and signaling overhead*. In this work, since the information each sensor needs to convey is limited to one out of a number of known messages, we take a cross-layer design in which the coding and the channel access algorithm are intertwined. Indeed recently, data aggregation was used to compress the data and reduce its redundancy in order to save network energy before transmission to the sink [13]–[15]. In a sense, in the protocol we give herein, using the coding we suggest, *the channel inherently compresses the data efficiently* (based on a modified GT approach) by the addition in the air of the K messages transmitted simultaneously from the sensors to the sink.

Group Testing: Classical group testing was used during World War II in order to identify syphilis infected draftees while dramatically reducing the number of required tests, by examining pooled tests of mixed blood samples [16].

The concept was adopted later for multi access protocols. Specifically, MAC protocols adopted the GT philosophy for Collision Resolution Protocols (CRP). The basic idea behind these protocols is to resolve collisions whenever multiple users are trying to access the channel simultaneously, e.g., the binary-tree CR, the epoch mechanism or the Clipped Binary-Tree Protocol. An extensive survey of such protocols is given in [2, Chapter 5]. However, all these protocols utilized the GT concept *only as a collision resolution mechanism*, i.e., in case a collision occurred, they used the concept in order to decide who should contend for the channel next and when. Data was decoded successfully only when a single node transmitted without collision, using the standard layering and encapsulation. Thus, it is important to note that while there are indeed many works in the literature which utilize GT concepts in communication networks and other models [17]–[24], none suggest a protocol for collecting or disseminating data in wireless sensor networks. The main contribution of this paper is in suggesting a protocol which decodes all data, from all simultaneously transmitting sensors, using a novel extension to this concept, namely, analysing the location of the colliding and non-colliding minislots in order to identify *both the senders and the data sent*.

IV. WSN Data Collecting Protocol Design

In the suggested protocol, the sink periodically transmits a predefined beacon, which starts a report transmission interval.

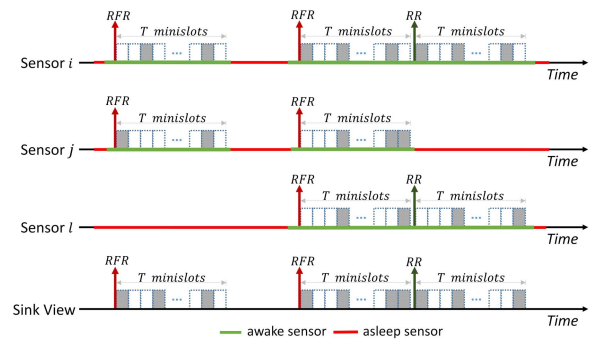

Fig. 2. Basic protocol operation.

We term this beacon RFR (Request For Reports). The RFR is then followed by a sequence of T minislots. Figure 2 provides an illustration of the protocol operation. Note that there is no need for synchronization or for each sensor to keep track of the minislot boundaries at all times, as the awake sensors waiting for transmission can synchronize based on the received RFR. Denote by τ the maximum propagation delay between any sensor and the sink, and by η the time required by the sink to identify that there is transmission going on. Note that η can be very short, as it only corresponds to the duration required by the sink to sample the channel and identify that there is a transmission going on (there are no headers, preambles or data involved). We assume that the minislot duration is longer than $2\tau + \eta$, which is sufficient for all sensors to receive the RFR, start a transmission of duration η and for the sink to receive all the transmissions starting in this minislot. I.e., as far as the sink is concerned, the time duration of a minislot is such that there is no transmission that can start on the current slot and leak to the next slot. It is reasonable to assume that $\eta \geq \tau$, hence the minislot duration is greater than 3τ. After transmitting the RFR, the sink node switches to receive mode and identifies whether there was a transmission on each of the following T minislots. Recall that the sink detection is binary, i.e., it can only recognize whether there was a transmission in a minislot or not. It does not try to detect how many sensors transmitted during an occupied minislot.

Each sensor is assigned a unique sequence of ones and zeroes of length T, for each of its messages. The construction of the sequences is given in Section VI. A sensor wishing to send a report wakes up and waits for the RFR. After receiving the RFR, the sensor follows the sequence associated with the message it wishes to transmit, transmitting "energy" of duration η (in the form of a pre-defined signal) at each minislot in which the corresponding bit in the sequence is one.

After the T minislots interval, the sink has a sequence of ones and zeroes of length T, indicating on which of the minislots it identified transmission. We denote by $Y(t)$ the sequence observed by the sink at the t-th interval. Based on the observed $Y(t)$ the sink tries to decode the messages transmitted by the sensors (we provide two decoding algorithms in Sections VI and VII). Note that since the sequences are unique, each sequence indicates the identity of the sender and the message sent. If the sink is not able to decode the received sequence $Y(t)$, which, as we prove in Section VI, can only happen if the number of transmitting sensors in the interval was greater than the expected number K for which the sequences were designed, it transmits another beacon, termed Retransmission Request (RR), which starts the exact same procedure as the RFR only this time sensors waiting for transmission participate

Authorized licensed use limited to: Hohai University Library. Downloaded on May 08,2024 at 03:53:51 UTC from IEEE Xplore. Restrictions apply.

in the following interval only with some probability. The probability for participating in the following interval is predefined and can prioritize different messages (e.g., messages with high urgency will receive high probability and messages that can tolerate delay will be assigned low probabilities and sensors with non-urgent messages can go back to sleep waiting for their next wakeup time). The discussion on the collision resolution probabilities is beyond the scope of this paper, as our novelty lies in the transmission protocol and its ability to allow multiple transmission of messages without the various MAC and upper layers overheads. The collision resolution procedure is rather standard and can be repeated multiple times.

It is important to note that the suggested protocol can be *interleaved within traditional wireless sensor protocols*, in which some or all sensors are required to send occasionally a regular report. For example, the suggested protocol can be incorporated within the operation of RI-MAC [11], such that occasionally the sink transmits an ordinary RI-MAC beacon, which is different from the RFR beacon, to initiate an RI-MAC operation interval, i.e., the RI-MAC beacon will be followed by ordinary DATA transmissions according to the ordinary RI-MAC protocol. In the same manner, the suggested protocol can be combined with transmitter initiating protocol such as X-MAC [10], such that a sensor wishing to report a typical DATA packet transmits a sequence of short preambles prior to DATA transmission according to the X-MAC protocol.

Moreover, in Section IX, we extend the single hop setup presented in this section, to support a multi-hop setup in which a message needs to traverse multiple hops before reaching its designated sink.

Power Consumption: energy efficiency is an important performance criterion in wireless sensor networks. The protocol suggested in this paper is a MAC protocol in which the receiver initiates the data transmission. It has been shown that such protocols are highly energy-efficient over a wide range of traffic loads and topologies (e.g., [11], [12], [25]). However, such protocols are prone to collisions when the network is dense and multiple devices are waiting to transmit simultaneously to the same receiver (sink, or a relay in a multihop topology). Such collisions are energy wasteful as they not only waste the energy consumed by the devices in the failed transmission but they also require a collision resolution mechanism to allow retransmission of the lost packets, a mechanism which is typically consume high energy. This is because once the collision resolution mechanism is applied, the awake time of the sensors increases dramatically. Note that as given in [26], the high difference in power consumption is between a mode where the sensor is asleep to the mode where it is awake. The difference in power consumption between idle mode once the sensor is awake, and the mode that sensor transmitting or receiving information is minor. The protocol introduced in this paper improves energy consumption over the existing receiver initiated MAC protocol by four means. First and foremost, it allows the transmission of up to K devices simultaneously, hence dramatically reduces the collision probability. Note that K is a parameter chosen by design hence can be adjusted based on the topology and the expected traffic pattern. Second, the overhead involved in a packet transmission (the protocol data unit (PDU)) is dramatically reduced, hence transmission time is reduced. Third, the protocol relies on an energy detection mechanism which is robust to noise and interference hence suffers minimum transmission failures. Furthermore, simple energy detection requires a relatively low SNR to operate robustly. Fourth, the hardware requires only a simple energy detection mechanism with no need to run sophisticated algorithms, hence is expected to be very energy efficient.

V. Model Formulation and Transmission Process

In this section, we formalize the *WSN* model that is used throughout the paper. We denote the set of wireless sensors by $\mathcal{N}$. We will concentrate on a time instance right after an *RFR* has been sent by the sink and a subset of unknown sensors comply with the *RFR*, and transmit their reports. We denote this unknown subsets by $\mathcal{K}$. We denote by $N = |\mathcal{N}|$ and $K = |\mathcal{K}|$ the total number of sensors, and the number of active sensors at the same time slot, respectively. In the analytical part of the paper we will assume that the number K of active sensors is known a-priori. The algorithms and results presented hereby can be easily adopted to the case where only an upper bound on K is known, and the actual number is smaller. The case where more than K transmit was briefly described at the end of Section IV. The sink objective is to determine which subset of the sensors were active and what is the information (messages) they transmitted. Throughout the paper, logarithms are in base 2.

Each of the sensors has its own set of C independent messages. We denote each such message by $M_{n,c}$, $n \in \mathcal{N}, c \in \{1, \ldots, C\}$, and sensor $n \in \mathcal{N}$ message list by:

$$\mathbf{M}_n = [M_{n,1}; M_{n,2}; \ldots; M_{n,C}]$$

We further consider all the possible sets of K active sensors, and denote by $W \in \{1, \ldots, \binom{N}{K}\}$ the index of the *subset* $S \subset \{1, \ldots, N\}$ *of sensors active and transmitting at the same time*. Thus, S_w denotes the w-th subset of size K out of the N sensors. The WSN solution we consider is fair in a sense that if sensors have the same transmission probability, they have the same probability to access the channel and the protocol suggested dose not prefer sensors over others. We further denote by

$$\mathbf{M}_W = [M_{w_1,c_1}; M_{w_2,c_2}; \ldots; M_{w_K,c_K}]$$

the K messages transmitted by the active sensors (members of S_w) to the sink. Note that each row in $\mathbf{M}_W$ corresponds to a separate message, that is, M_{w_i,c_i} is the c_ith message of the w_ith sensor in the active set.

As previously described, for each message a sensor has a unique sequence, which in the sequel we refer to as codeword. That codeword is the one transmitted whenever the sensor intends to send this message. In other words, if sensor n is set to send $M_{n,c}$, it uses the codeword X_n^T associated with this message. Each message has a different codeword associated with it (we drop the message index for clarity). Given the particular messages sensors intend to transmit, we define a *transmission* matrix

$$\mathbf{X} = [X_1^T; X_2^T; \ldots; X_N^T] \in \{0,1\}^{N \times T},$$

where each row corresponds to a codeword, describing the message a sensor may transmit *if it is active*.

Assuming that sensors use Power Amplitude Modulation (PAM), we denote by

$$\tilde{x}_j(l) = \sum_{t=1}^{T} X_j(t) g(l - (t-1)T_0), \quad 0 \le l \le T \cdot T_0,$$

Authorized licensed use limited to: Hohai University Library. Downloaded on May 08,2024 at 03:53:51 UTC from IEEE Xplore. Restrictions apply.

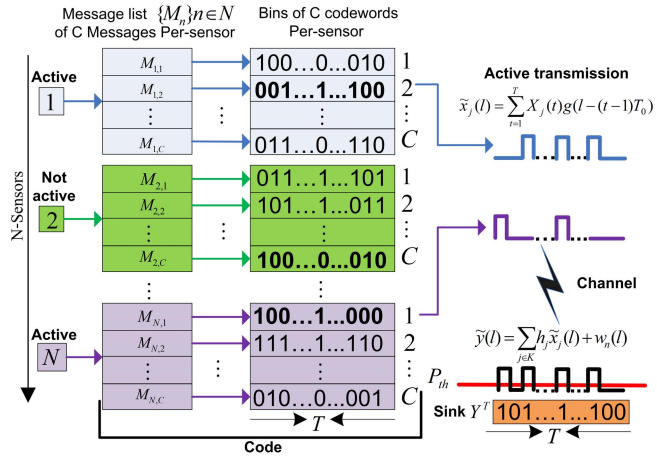

Fig. 3. Encoding, transmission and detection in the suggested protocol.

the signal transmitted by the j-th sensor, where minislot t is defined by $(t-1)T_0 \le l \le tT_0$ and $g(l), 0 \le l \le T_0$ denotes the PAM pulse. The channel output signal $\tilde{y}(l)$ is given by

$$\tilde{y}(l) = \sum_{j\in\mathcal{K}} h_j \tilde{x}_j(l) + w_n(l),$$

where h_j is a channel fade for the jth active sensor and w_n is an additive noise at the sink. Note that the fade herein is fixed for the entire transmission only for simplicity of exposition, and it may depend on t as well. Figure 3 depicts an example.

We denote by P_{th} the power threshold of the sink's hard decision mechanism. Hence, the outcome vector $Y_T = (Y(1), \ldots, Y(T))$ at the sink is binary, with 1 in a minislot t if

$$\int_{(t-1)T_0}^{tT_0} \tilde{y}(l) g(l-(t-1)T_0) dl \ge P_{th},$$

and 0 otherwise. In the first part of this work we assume that the noise in the channel cannot produce errors at the sink. In Section VIII, we will extend the model, and consider the case in which noise can produce positive and negative errors.

We denote by $\hat{W}$ and $\hat{\mathbf{M}}_{\hat{W}}(Y^T)$ the set of sensors estimated by the sink to be the transmitting set, and the estimated set of messages sent by them, respectively, according to the received signal Y^T. We refer to the possible transmission matrix, together with the decoder as a *WSN algorithm*. The following definition lays out the goals of the WSN algorithm.

Definition 1: A sequence of WSN algorithms with parameters N, K, C and T is asymptotically reliable *if at the sink, observing Y^T, we have*

$$\lim_{N\to\infty} P(\hat{\boldsymbol{M}}_{\hat{W}}(Y^T) \ne \boldsymbol{M}_W) = 0,$$

i.e., the error probability both in the active set and the message associated with this set, goes to zero as the number of sensors goes to infinity.

In Section X, we show that our coding and decoding procedures are successful at moderate and even small values of N. In the next section, we construct a code (for parameters N, K and C) which associates a codeword of length T to each of the $N \cdot C$ messages (C per sensor) and a decoding algorithm $\hat{\mathbf{M}}_{\hat{W}}(Y^T)$, such that observing Y^T, the sink will identify the subset of active sensors and the messages transmitted by them with desired high probability.

VI. Code Construction and Decoding at the Sink

We now turn to the construction and decoding in detail.

A. Codebook Generation

For each sensor $n \in \mathcal{N}$, we map each message $c \in \{1, \ldots, C\}$ to a codeword. We now provide the construction of a codebook per sensor. Let $P(x) \sim Bernoulli(\ln(2)/K)$. Using a distribution $P(X^T) = \prod_{i=1}^{T} P(x_i)$, generate C independent and identically distributed codewords $x^T(c)$, $1 \le c \le C$. We denote this set of codewords as the n-th "bin". Thus, a bin contains C codewords of size T. Bins across sensors are independent as well. The codebook is depicted in the central side of Figure 3. Reveal the codebooks to the sensors and the sink.

B. Decoding at the Sink

The first decoder we suggest is the optimal decoder, Maximum Likelihood (ML). This decoder will declare the right set of K messages transmitted (and the active sensors) with a high probability if T satisfies the bound Lemma 1 below. However, such a decoding algorithm is complex and assume that W is uniformly distributed, that is, there is no *a-priori* bias to any specific subset of active sensors. Hence, in Section VII, we consider a computationally efficient algorithm without any assumption required on W distribution.

As described in Section V, in the first decoding step, the sink uses a hard decision mechanism to achieve the binary channel output vector Y^T. After Y^T is obtained, the ML decoder looks for a collection of K codewords $\hat{\mathbf{X}}^T_{S_{\hat{w}}}$, *each one taken from a separate bin*, for which Y^T is most likely. Namely,

$$P(Y^T|\hat{\mathbf{X}}^T_{S_{\hat{w}}}) > P(Y^T|\mathbf{X}^T_{S_{\dot{w}}}), \quad \forall \dot{w} \ne \hat{w}.$$

That is, the sink looks for both the set $\hat{w}$, and the messages $\hat{c}_j, j \in S_{\hat{w}}$ which explain Y^T the best. Then, the sink declares $\hat{W}$ as the set of active sensor and maps the rows in $\hat{\mathbf{X}}^T_{S_{\hat{w}}}$ back to the messages, as this is a $1:1$ mapping.

C. Reliability

The following lemma is a key step in proving the reliability of the decoding algorithm.

Lemma 1: If the size of the codewords satisfies

$$T \ge \max_{1\le i\le K} \frac{(1+\varepsilon)K}{i} \log \binom{N-K}{i} C^i, \tag{1}$$

then, under the codebook above, as $N \to \infty$ the average error probability approaches zero.

Note that using the upper bound $\log \binom{N-K}{i} \le i \log \frac{(N-K)e}{i}$, the maximum in Lemma 1 is easily solved, and we have

$$T \ge (1+\varepsilon)K \log(N-K) Ce.$$

That is, assuming a WSN algorithm for the protocol described in Section V, with the parameters N, K and C, if the size of the codewords is

$$T = \Theta\left(K \log NC\right), \tag{2}$$

Authorized licensed use limited to: Hohai University Library. Downloaded on May 08,2024 at 03:53:51 UTC from IEEE Xplore. Restrictions apply.

observing Y^T at the sink, the decoder can identify the sensors and the messages with high probability.

Corollary 1: If the application requires that each sensor will be able to send any B-bits message (supporting $C = 2^B$ messages per sensor), the number of minislots (codeword size) required to support up to K out of N sensors transmitting simultaneously is $\Theta(K \log N + KB) = \Theta(K(\log N + B))$, namely, besides the inevitable linear dependency on the B information bits, there is only a logarithmic added factor in the number of sensors N. However, note that the messages themselves convey the senders' IDs, which obviates the need for additional bits (by means of a header) to convey the sender's identity, which is at the least $\log N$ bits.

Remark 1: As can be seen in (2), the codeword length scales logarithmically with the number of messages each sensor can send (i.e., linearly with the number of information bits, B, which can be sent). If these codewords are too long due to design issues, such as too large memory at the sensors, too large codebook at the sink or too long a sensor capturing the channel for each transmission (too many mini-slots), fragmentation can be used such that the set of messages can be partitioned into two or more groups (the B information bits can be fragmented into smaller chunks of information). Note that if fragmentation is required due to memory issues, it should be done in advance (before the message is coded). However, if fragmentation is required due to channel capturing, it could be done on the codeword itself (i.e., after coding). Recall that the protocol supports back-to-back transmissions.

The proof of Lemma 1 extends the results given in [27, Theorem III.1] to the codebook required for WSN. Specifically, we may interpret the analysis in [27, Section III] as analogous to the case where each sensor has *only one message in its bin*. However, in the WSN protocol suggested herein, each sensor has C messages in its bin, and the decoder has $\binom{N}{K}C^K$ possible subsets of codewords to choose from, $\binom{N}{K}$ for the number of possible sensors and C^K for the number of possible rows (messages) to take in each bin. The analysis is complex, taking into account the fact that rows have to be selected from different bins, and is out of the scope of this version. In the technical report completing this submission, Appendix G, we formally analyze the bound on the error probability, based on our earlier work [28, Lemma 2].

VII. Efficient Decoding Algorithms

In the decoding algorithm described in Section VI, as well as the secured version given in Appendix B, the sink uses an ML decoder to identify the sub-set of K active sensors and the messages they transmitted. Such a decoding algorithm may suffer from high computational complexity, especially when the number of simultaneously transmitting sensors, K, is high. In this section, we present a computationally efficient algorithm. Specifically, we harness the Column Matching (CoMa) procedure [3], which utilizes a much simpler decoding rule at the price of only a slightly lower rate, i.e., slightly higher codeword length T. The resulting decoding process at the sink is very efficient, and can be implemented for practically any N and K.

CoMa as given in Algorithm 1, relies on the observation that a busy minislot (i.e., a minislot for which the sink detected energy on the channel) can only indicate that at least one of the sensors transmitted in this minislot, yet, using a busy minislot one cannot validate or invalidate any *specific codeword*. In other words, during a busy minislot, regardless of whether a corresponding bit in a codeword is 1 or 0, if the codeword was suspected as a transmitted codeword it remains as such. On the other hand, an idle minislot (i.e., a minislot in which no transmission was detected by the sink) *can invalidate codewords in which the corresponding bit was 1*, i.e., all codewords for which the corresponding bit is 1 could not have been transmitted (disregarding noise; The noisy case is discussed in Section VIII). Accordingly, CoMa examines all minislots for which no transmission was detected, and invalidates the codewords that 1 appears in the corresponding bit. In Appendix H we show an example of CoMa algorithm.

Algorithm 1 Efficient Decoding Algorithm (CoMa)

Input: $Y^T = (Y(1), \ldots, Y(T))$
Initialize: $C_{act} \leftarrow \{1, \ldots, N \cdot C\}$
for $t = 1$ to T **do**
  if $Y(t) = 0$ **then**
    $C_{act} \leftarrow C_{act} \backslash \{n, c : X_{n,c}(t) = 1\}$
  end if
end for
Output: the sink declares all the codewords in C_{act} as transmitted and the corresponds sensors as active.

Note that with $N \cdot C$ possible codewords, the bound proposed in [3, Theorem 4] for the CoMa algorithm on the length of the codewords directly holds in the suggested protocol given herein. Moreover, we note that for low complexity decoders, at the price of longer sequences, we can consider several algorithms given in the literature, which use efficient group testing codes. Moreover, it is possible to use Reed-Muller codes [29] as well. Those codes are systematic codes, rather than the random codes we present. The literature includes several structured codes for group testing. For example, [30]. In general, structured codes can achieve better performance, namely, shorter sequences. Yet, any of these codes, using efficient decoding algorithms, cannot outperform ML decoding.

Section X presents numerical results which validate the above intuition, and depict the actual message lengths required by both algorithms.

VIII. Effects of a Noisy Channel

One of the advantages of the suggested protocol is its robustness to noise and interference. This robustness, however, is not achieved by applying known channel coding techniques as a back-box, or an extra error-correction layer above the suggested protocol, but rather integrates seamlessly with the code construction itself and the decoding algorithm. In this section, we describe a few methods to achieve this robustness, and discuss its price.

Before discussing this robustness via the theoretical analysis of ML decoding, it is easy to see how it is achieved and its price via the extension of the efficient decoding algorithm, CoMa, to the noisy version. Recall that CoMa relies on the fact that a received minislot with below the threshold energy, indicates that all the possible sequences with 1 in this specific minislot can be eliminated, as they were definitely not in the generating set. However, with a noisy channel such a deduction cannot be asserted, as each such minislot can be erroneous. Accordingly, we adopt the Noisy-CoMa suggested

Authorized licensed use limited to: Hohai University Library. Downloaded on May 08,2024 at 03:53:51 UTC from IEEE Xplore. Restrictions apply.

for non-secure GT [3]. Specifically, as given in Algorithm 2, we relax the firm CoMa requirement that each and every 1 in a transmission sequence must overlap with a high energy minislot in the (additive) outcome. Instead, we allow for a certain number of "mismatches", which is determined based on both the number of ones in each transmission sequence and on the noise level we wish to be protected from (specifically, on the probability q that the energy detector will provide an erroneous decision, interpreting high energy minislot as low energy, or vice versa).

Formally, for a codeword c of sensor n, we define by $\zeta_{n,c}$ its support, i.e., the set of indices which correspond to 1 in the sequence ($\{t : \mathbf{X}_{n,c}(t) = 1\}$). We also define the matching set $\beta_{n,c}$ as the intersection of $\zeta_{n,c}$ and the support of Y, that is, where both $Y(t) = 1$ and $\mathbf{X}_{n,c}(t) = 1$. The decoder the uses a "relaxed" rule, in which it allows a codeword to have less than a fraction q of minislots in which the codeword has 1 but the received signal was detected as below the threshold signal ($|\beta_{n,c}| \geq |\zeta_{n,c}|(1 - q(1 + \epsilon))$, for $\epsilon > 0$). All codewords with a fraction of mismatches less than q are declared as transmitted. This procedure overcomes the errors occurring by the energy detection mechanism, at the price of a slightly longer T compared to the original CoMa algorithm given in Section VII. Thus, the procedure is analogous to conventional channel coding, where redundant bits protect form error, trading-off rate for robustness, yet, herein, we do not explicitly add parity bits on information bits, but rather increase T, resulting in longer random sequences as codewords, and on the other hand relax the requirement in the decoding algorithm. To understand exactly how large T should be, note that for $N \cdot C$ possible codewords, the bound proposed in [3, Theorem 5] for Noisy-CoMa directly holds in the suggested protocol given herein. The parameters of the Noisy-CoMa to control the performance of the algorithm are detailed in the analysis of [3, Theorem 5]. For example, the probability of not identifying a transmitted codeword increases for low ϵ. On the other hand, the probability of declaring-as-transmitted codeword by the decoder, a codeword that was not transmitted, increases for high ϵ. Hence, choosing ϵ properly is highly important (see [3, Section IV]).

Noisy-CoMa is a clear example how to achieve robustness to noise via slightly larger T. However, as Noisy-CoMa is a sub-optimal algorithm, better performance, i.e., better points on the robustness-rate trade-off curve can be achieved via ML decoding. Specifically, the bounds we provide for the ML decoder are based on a Gallager-type bound for channel coding. First, similar bounds on ML decoding for the noisy case in group testing were considered in the literature, utilizing similar channel coding principles (e.g. [27]). These bounds apply for noisy group testing, hence directly apply to our protocol considering $N \cdot C$ codewords. Again, in the case of a noisy channel, by adding additional mini-slots, at a rate which corresponds to the noise level, the system can achieve the channel capacity as in the traditional random codes proposed in the literature, hence correct errors in group testing at the optimal rate. In fact, [27] includes several types of errors as discussed below. Moreover, the same techniques which have been widely studied in the literature for the single source case [31], also apply to our extended model of multiple sources transmitting simultaneously. This similarity to the typical multiple access channel setup can allow us to exploit the conventional channel coding for random codes in our case.

Algorithm 2 Efficient Algorithm With a Noisy Channel

Input: $Y^T = (Y(1), \ldots, Y(T))$
Initialize: $C_{act} \leftarrow \{1, \ldots, N \cdot C\}$, and β and ζ to zero
for $t = 1$ to T **do**
  if $X_{n,c}(t) = 1$ **then** $\zeta_{n,c}(t) = 1$ **end if**
  if $X_{n,c}(t) = 1$ and $Y(t) = 1$ **then** $\beta_{n,c}(t) = 1$ **end if**
end for
$C_{act} \leftarrow C_{act} \backslash \{n, c : |\beta_{n,c}| \geq |\zeta_{n,c}|(1 - q(1 + \epsilon))\}$
Output: the sink declares all the codewords in C_{act} as transmitted and the corresponds sensors as active.

E.g., for the optimal ML decoder suggested in Section VI, the enhancement is straightforward. Since the decode looks for a set of codewords, for which the signal received at the sink is the most likely set that has generated this outcome, regardless of whether there is a perfect match between the combined set and the outcome on all the minislots, all we have to do is add sufficient redundant minislots to ensure that the genuine set is discovered (i.e., turns out most likely) despite the few erroneous minislots. The full analysis of the number of minislots required to add using ML decoding follows from [27, Section VI], with the consideration that each sensor has at most C possible messages, similar to our analysis in Section VI and Appendix G for the error-free case.

Finally, we discuss in details the types of errors actually expected. Specifically, in the protocol suggested, the sink node only relies on a simple energy detection mechanism in which on each minislot it just needs to detect whether there was a legitimate transmissions (one or more), or not, i.e., similar to the traditional carrier sense mechanism, whether the received signal is above the noise floor or not. Since the decoder only needs to distinguish between an idle minislot and a busy minislot, there are two possible errors: false positive detection, in which the sink detects energy despite the fact that no legitimate sensor was emitting energy in the minislot, and false negative, in which the sink does not detect energy despite the fact that at least one legitimate sensor had emitted energy during the minislot. The trade-off between these two errors is a function of the noise on the channel, and can be tuned by tuning the threshold to which the detected energy level is compared. E.g., false positive can happen due to interference, while miss detection can happen due to deep fades. The actual values of these probabilities depends on the decision level, and a detector can choose which errors are more critical, and which are "allowed". Note that without explicit error correction, at least for false positive, an error may result only in false positive detection of a message, i.e., the sink will identify an additional message that was not transmitted, yet there will be no false negatives for which the sink will lose a legitimate transmission (there can be an undecodable reception in which a retransmission is required). Nevertheless, with the algorithms described above, at the price of higher codeword length T (depending on the noise level it needs to overcome), both errors can be corrected. Additional discussions on noisy group testing and types of noise are in [27], [32], [33]. Analysis of noisy GT from an SNR perspective is given in [21].

IX. Multi-Hop Paths

Throughout this paper we mainly concentrate on a single hop path setup in which each device (sensor) is a single hop

Authorized licensed use limited to: Hohai University Library. Downloaded on May 08,2024 at 03:53:51 UTC from IEEE Xplore. Restrictions apply.

away from its respective sink, i.e., the message transmitted by a sensor is directly received by its associated sink without the need for any relay. However, the protocol presented herein can be easily modified to support multi-hop paths in which a message needs to traverse multiple hops (pass through multiple relays) before reaching its designated sink. In this section we suggest possible modifications which support such multi-hop paths setup.

The enhancements suggested herein rely on hierarchical or cluster-based routing which is widely studied in the context of data forwarding in wireless sensor networks. In cluster-based routing, all sensors are organized in groups termed clusters. Each cluster includes a Cluster Head (CH) which collects the messages from its own cluster members and forwards it to its designated sink. The information (messages) can traverse several relays before reaching the sink. These relays, that forward the traffic toward the sinks, can be dedicated entities, other CHs or other sensors. We distinguish between the tier in which each CH collects the information from all its devices and the tier that inter-connects the CHs to their designated sinks; we denote the latter the backhaul tier. Several hierarchical routing protocols have been developed based on such cluster-based-architecture, and it has been shown that such protocols not only address the multi-hop routing challenge, but also enhance many other performance objectives such as energy consumption, load balancing and the scalability problem of large WSNs (e.g., [26], [34]). In the sequel we present two approaches to extend the suggested protocol to support multi-hop traffic. We only consider the aspect of aggregating and fusing data on its way to the sink. The routing protocol itself and the cluster forming algorithm are out of the scope of this paper, and can be adopted from various algorithms and protocols suggested in the literature (e.g., [26], [34]).

We suggest two approaches to forward the messages along the routing paths toward the set of sinks. In both approaches each CH collects the messages from its designated sensors based on the suggested protocol (Section IV). The difference is in the forwarding tier (the backhaul tier). Specifically, in the first approach the forwarding mechanism that forwards the messages collected by each CH toward the sink is performed via any traditional MAC protocol (e.g., [10], [11], [26]). Recall that as discussed in Section VI the suggested protocol can be interleaved within traditional wireless sensor protocols. Accordingly, the data collection and the forwarding procedures can utilize different protocols. Note that relying on this approach, each relay does not need to decode the messages or identify the senders and can simply forward the received sequence ($Y(t)$) as the message payload. Accordingly, the relays need not hold the code books or perform any decoding procedure. Each sink will hold the code-books of its designated devices and perform the decoding procedure for each cluster separately, as described in Section VI. Further note that the length of the sequences assigned to each device per message (T) which reflects on the number of transmission mini-slots and eventually on the message length forwarded on the backhaul tier, can vary between the clusters and should be according to the number of devices in each cluster. Each sink should maintain the codebook for each of its designated clusters. Based on the received packet origin (the originating CH) and the respective codebook it can decode the messages. On the other hand, the forwarding protocol on the backhaul tier is not only inheriting the overhead required by the selected protocol (headers, trailers, control fields, contention mechanism, etc.) but also is prone to the detriments characterizing the selected protocol (e.g., collisions, channel access delays, reliability).

In the second approach both the data collection protocol and the forwarding procedure rely on the protocol suggested in this paper. The challenge is that different relays forward different numbers of messages from different sets of devices. Note that even in the same forwarding subtree the closer one gets to the sink the larger the number of messages that can traverse the relay and the larger the number of messages comprising the transmitted sequence. We suggest two different ways to resolve this challenge, each with attendant pros and cons.

(i) *Combine and Forward*: According to this scheme each relay needs to combine the received sequences to a single one and transmit it forward. This approach utilizes a single codebook for each subtree (each sink and all its descending devices share a single codebook). Accordingly, the length of the sequences assigned to each device per message (T) is the same for all messages destined to the same sink. The codebook for each such subtree is designed exactly as described in Section VI, where the length of the codewords is determined according to the number of possible messages destined to each sink (N, C and K are determined according to the number of devices in the tree rooted at the sink, the number of expected messages per device in the tree[1] and the estimated upper bound on the expected number of awakened devices simultaneously, respectively). Note that different sinks can have different codebooks with different codeword length and that the codebooks need not be coordinated between the trees rooted at different sinks. Note that as in the first approach, also in this case the relays do not need to decode the messages or identify the senders, instead whenever a relay needs to forward reports (receives the RFR indicating a new transmission cycle start) it just needs to combine all the received sequences (conduct Boolean sum of the "bit" pattern received from all its successors) and transmit the result sequence. Obviously, the cost is that all the transmission periods by all relays along the path to the sink are according to the total number of devices in the respective subtree.

(ii) *Encode-Decode-Combine and Forward*: Based on this scheme, each relay needs to encode the received sequence, re-decode the received messages based on a different codebook, combine the received sequences to a single one (conduct Boolean sum of the new decoded sequences) and transmit it forward. Accordingly, each relay will have its own codebook which needs to be coordinated only with its direct descendants. The length of the sequences (codewords) transmitted by the relay's descendants is according to the number of possible messages from all its descendant devices[1] (number of possible messages in the subtree rooted at the relay). Note that the transmission period grows the closer one gets to the sink, reaching its maximum on the last hop which connects the sink to its descendants (exactly the same as the length of the sequences at the Combine and Forward scheme). However, note that the cost is that each relay needs to decode the messages received, map each one to its corresponding longer sequence, locally combine them to the longer combined sequence (performing Boolean sum, emulating the transmission of the sequences) and transmit the newly generated sequence after receiving the RFR.

Authorized licensed use limited to: Hohai University Library. Downloaded on May 08,2024 at 03:53:51 UTC from IEEE Xplore. Restrictions apply.

X. Simulation Results

In this section, we provide insight into the proposed protocol and the analytical results presented in this paper, both for the unsecured and secured versions, via simulations. It is important to note that comparison with all-purpose WSN MAC protocol is pointless, as the overhead required to support such all-purpose protocols is one order of magnitude greater than the one required in our designated protocol. For example, utilizing RI-MAC [11], which is considered a highly efficient protocol, for the data harvesting problem presented in this paper, the sink node would need to broadcast a beacon, similar to the RFR herein, followed by the report transmissions by all pending sensors. Obviously, if more than one sensor is waiting for transmission, which is highly probable in such a dense network, a collision will occur and a tedious collision resolution will follow; in case of several nodes transmitting simultaneously, this can repeat several times, which is time consuming. Besides the overhead and latency consumed due to the channel access and collision resolution mechanism, the message payload, which can range between several bytes per message to much longer messages, is also airtime consuming (e.g., in [11] the performance on short packets of $28\ Bytes$ was examined). In addition, one needs to take into account the overhead induced by data encapsulation which can include multiple addresses and other control information (e.g., an 802.11 ACK message, which conveys only receiver ID and a single bit of information is $14\ Bytes$ plus physical-layer encapsulation). In contrast to all this overhead, as we will show in our results, assuming a network of 500 nodes and allowing up to 5 sensors transmitting simultaneously, each having up to 10 different messages it can transmit, will require only about 65 minislots, each of which can be the length of a *single modulated bit.*

All simulations presented are conducted in MATLAB, where we implemented the suggested protocols in full: code construction, encoding, the multiple access wireless channel (noise and propagation channel gain) and decoding procedure at the sink, as well in the secure model decoding procedure at the eavesdropper.

First, we examine the noiseless channel assuming that there are no errors in the signal received. In Figures 4 we examined the size of the required codeword (T) to decode the messages, for the unsecured and secured versions. In particular, for $N = 500$, $C = 10$ and with $K = 3$, we repeated the simulations trying to decode the messages for different T and presenting the minimal T required both for the ML and the CoMa decoders. It is important to note that in the secure model we adapted the number of codewords in each sub-bin as required in the code construction, to keep the eavesdropper completely ignorant, namely, with success probability approaching zero, i.e., for each T we constructed a different code. Each plotted point in the figure depicts the average of 4000 simulations.

The dash lines in Figure 4 depicts the performance of the WSN model given in Sections VI and VII, using CoMa and ML decoding algorithms. In particular, we present the Cumulative Distribution Function (CDF) of decoding the messages as a function of the size of the codeword in the code (T). For example, as can be seen in the figure, in order to attain 95% success probability the required codeword length is $T = 35$ and $T = 105$ for the ML and the CoMa decoders, respectively, i.e., in 95% of the simulation instances we succeeded to decode the messages for these T's. In order to attain 100% of success, T should be 45 for ML and 130 for the CoMa decoder. It is important to note that for this setup there are no false negatives, i.e., the sink can mistakenly decode more messages than actually sent, but will not miss a message. This is due to CoMa the algorithm, in that it detects the codewords that can't be transmitted by checking which of the minislots in Y was zero and which codewords (from all the codebook) in these positions are one. Hence, using CoMa there is no false negative. Moreover, the ML decoder looks for exactly K codewords. Accordingly, one can compromise the success probability slightly in order to shorten the transmission time.

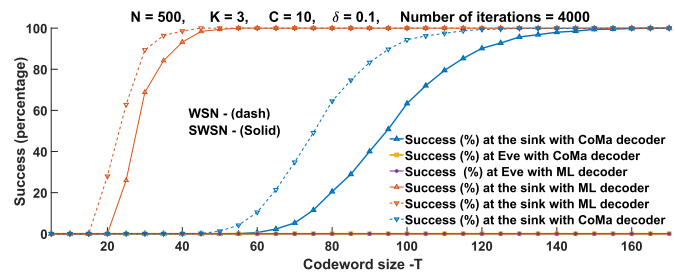

Fig. 4. ML and CoMa simulation results.

The solid lines in Figure 4 show the performance of SWSN model given in Appendix B, using the same setup as in the previous simulations, only this time in the presence of an eavesdropper which is accessible on average to $T\delta$ minislots from the sink output channel, where $\delta = 0.1$ (i.e., in the simulations we have randomly decided whether the eavesdropper can sense the energy generated on each minislot, such that each minislot was heard by the eavesdropper with probability $\delta = 0.1$, independent from one minislot to the other). Again, it can be seen that the simulation results agree with the analytical results given in Appendix B. Specifically, the code length, T, (number of minislots) which guarantees 100% decodable rate is $T = 55$ and $T = 160$ for the ML and the CoMa decoders, respectively, falling behind the analytical upper bound.

XI. Performance Evaluation

In this section we will evaluate the potential gains of utilizing our scheme compared to other schemes, by numerical computation. We will address two performance indicator measures, latency and power consumption. Latency relates to the time elapsed between the time when a sensor report's generation and its successful receipt by its intended receiver. Power consumption relates to the average energy consumed by a sensor per unit time (reflecting on the sensor's battery lifetime). Obviously, different tasks and operations consume different power, yet it has been widely shown that the difference between the power consumed by a sensor in transmission mode and in receiving mode is negligible, and the main power consumption gain is when the sensor's transceiver is in low power mode, i.e., in "Sleep" or "Idle" modes (e.g., [26, Chapter 3]). Accordingly, the factor that highly reflects on the sensor's power consumption is its duty-cycle or the average time it is "awake" (its transceiver is active). In order to get some insight into the gains associated with our scheme, we will simplify the setup, and concentrate on a simple star topology in which each sensor occasionally sends a report to a single sink.

The suggested protocol pertains to the receiver-initiated MAC protocol class hence inherits the advantages (and disadvantages) of the class. The performance comparison between

Authorized licensed use limited to: Hohai University Library. Downloaded on May 08,2024 at 03:53:51 UTC from IEEE Xplore. Restrictions apply.

the receiver-initiated approach and the transmitter-initiated approach has been extensively studied, under diverse topologies and traffic patterns (e.g., [11]). In the transmitter-initiated approach, whenever a sensor has nothing to transmit it remains Idle, waking up periodically to check whether other sensors intend to transmit to it. However, whenever a sensor needs to transmit a report, it needs to find a rendezvous time with its intended receiver for the data exchange. If it knows the accepted receiver wake-up time, it needs to wake up a little before it and capture the channel until its intended receiver is awake (e.g., [25], [35]). Otherwise, it needs to capture the channel for a long time interval via long preamble, which lasts longer than the intended receiver's sleep interval, to ensure that its designated receiver is awake (e.g., [4]). Alternatively, it can replace the long preamble with a sequence of short preambles letting its intended receiver notify it that it is awake and ready to receive the report (e.g., [10]). Both schemes attain high-energy efficiency under light traffic because a sensor node spends most of its time asleep and only sporadically wakes up for a very short duration, checking channel activity. The latency of these schemes under light traffic patterns is low as on average a transmitter needs to wait for half the sleep interval, and at most the complete sleep interval until DATA is delivered. When traffic is more condensed, the performance deteriorates dramatically. For the preamble-based protocols (e.g., [4], [10]) if several sensors are backlogged simultaneously, they need to transmit sequentially staying awake for a long time interval and the later the transmitter is in the sequence, the longer the latency. For example, let us assume that K sensors generated a report to the sink simultaneously (e.g., experienced an event that needs to be reported by all sensors in the vicinity). Let us assume that one of the sensors immediately starts a preamble transmission. The rest of the sensors will go to sleep in order to save power. On average, the sensor that woke up will wait for half the sink's sleep interval before sending the report; hence the report will be received after $\frac{T_s}{2}+\tau[sec]$, where T_s denotes the sink sleep interval, and τ denotes the report transmission time. A second sensor will wake up after a time that is distributed as the minimum of $K-1$ *i.i.d* uniformly distributed random variables (we assume that the wake-up times are uniformly distributed over time), hence on average $\frac{T_s}{K}[sec]$ after the first report was sent. However, the sink will wake up only T_s time units after it went to sleep, thus T_s time units after it received the first report and the report will be received after $\frac{T_s}{2}+\tau+T_s+\tau[sec]$. Similarly, the next report will be received after an additional T_s time units, and so on and so forth. Accordingly, the j-th report will be received by the sink after $\frac{T_s}{2}+\tau+(j-1)(T_s+\tau)[sec]$. The average latency for the K reports is- $\frac{T_s}{2}+\frac{(K+1)}{2}\tau+\frac{(K-1)}{2}T_s$. Obviously, one can trade latency with power consumption by manipulating the sleep and wake durations, e.g., requiring the sink to stay awake all the time, increasing its power consumption, reducing the average latency (the average latency will be $\frac{(K+1)}{2}\tau+\frac{\sum_{i=K}^{2}\frac{T_s}{i}}{K-1}$). In the predictive-wake-up approach, in which the sensors predict the sink's wake-up time, and start the preamble transmission just prior to it (e.g., [25], [35]), if they are not synchronized, the preamble transmission will not start simultaneously, and the sensors will manage to send their reports sequentially, resulting in a similar average latency as in the long preamble case. If the sensors are synchronized, the transmission will result in a collision, which in turn will require a collision resolution mechanism (we will return to the collision resolution procedure, shortly). Under light traffic patterns, receiver-initiated based protocols such as RI-MAC ([11]), attain slightly higher power consumption than the transmitter-initiated based protocols described above, as all sensors are required to transmit a short wake-up preamble even when having no reports to transmit. As far as latency is concerned, under light traffic patterns, the receiver-initiated scheme attains similar latency results as the predictive-wake-up protocols since similarly a backlogged sensor needs to wait for its designated receiver to wake up, before transmitting the report. Note that the average latency is shorter than the preamble-based approach, as the waiting sensor does not capture the channel, hence other sensors can interleave their reports (when destined to different receivers) while the sensor is waiting for its sink to wake up (detailed comparison can be found in [11]). Under high of even moderate traffic loads, the receiver-initiated based protocols are expected to experience collisions, similar to the predictive-wake-up based protocols, as multiple sensors are expected to wait for the same receiver wake-up preamble. Let us return to the example presented above in which K sensors are trying to transmit to the sink. In RI-MAC, after the sink wake-up preamble (on average $\frac{T_s}{2}[sec]$ after each sensor acquiring the report), all backlogged sensors will attempt transmission which will result in collision. The protocol will initiate a collision resolution protocol, which in RI-MAC relies on a modified exponential backoff mechanism where the sink declares the contention window in its preamble.

Similar to the *RR* presented herein, the collision resolution preamble suggested by RI-MAC initiates a slotted mechanism in which each backlogged sensor transmits in each slot with probability $p=\frac{1}{Win}$, where Win denotes the current window size (which is doubled after each collision). Accordingly, assuming that K sensors were involved in the collision, and assuming that all sensors can sense one another (no hidden terminals), the probability that the next transmission will be successful is $\sum_{i=1}^{Win-1}\binom{K}{1}\frac{1}{Win}\left(\frac{Win-i}{Win}\right)^{K-1}$. Such successful transmission will be followed by an additional inviting preamble and so on and so forth. A failed transmission (i.e. collision) will also be followed by an inviting preamble yet with doubled the contention window. Such a procedure will continue until the collision is resolved, all sensors have sent their reports and have gone back to sleep. In contrast, in the protocol suggested herein, up to K reports can be transmitted simultaneously and only an attempt of more than K sensors to transmit simultaneously will result in a failed transmission, which will require the intervention of the collision resolution procedure.

In order to explore the potential gains in the proposed approach, we realized it on a MATLAB simulation and compared its performance with the performance of RI-MAC. Since under light traffic the two protocols are quite similar, we mainly concentrated on moderate to high traffic and focused on the collision resolution procedure which is the main difference between the two. Our simulations adopted the parameters described in the RI-MAC paper ([11]), e.g., transmission rate 250 $Kbps$, report payload size- 28 $bytes$, header size- 6 $bytes$, contention slot duration- $320\mu s$, both hardware preamble and SIFS durations $192\mu s$, etc. Since we assumed a clique topology (no hidden terminals) we adjusted the minimum contention window to 8 rather than the 32 suggested by RI-MAC which can partly account for hidden sensors (we compared to both and adopted the smallest one which

Authorized licensed use limited to: Hohai University Library. Downloaded on May 08,2024 at 03:53:51 UTC from IEEE Xplore. Restrictions apply.

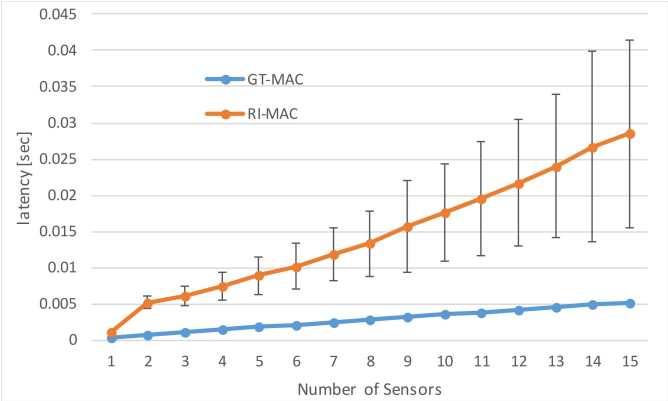

Fig. 5. Average latency between the time the sink transmitted the RFR and the time the messages were received successfully by the sink. In this scenario we adjust T according to the number of contending sensors.

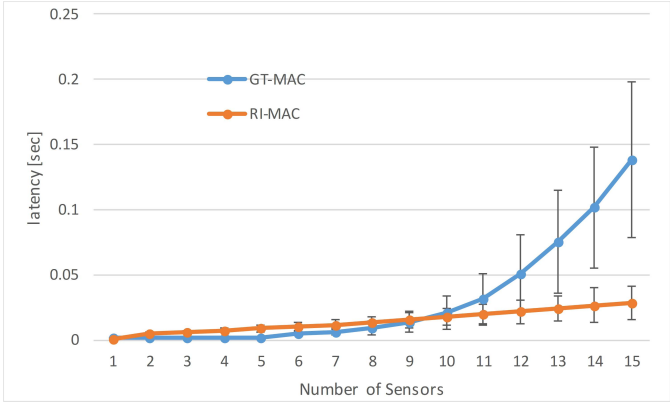

Fig. 6. Average latency between the time the sink transmitted the RFR and the time the messages were received successfully by the sink. In this scenario we kept T fixed supporting at most 5 simultaneous transmissions.

resulted in an enhanced performance). The transmission mini-slot duration which was adopted in our protocol, which should be sufficient to discern between "Idle" and "Busy" mini-slot hence should be longer than twice the maximal propagation delay between the sink and any sensor, plus the time which will suffice for the energy detection mechanism was set to $50\mu s$, which is quite conservative (the propagation delay in a few hundreds of meter topology is in the order of a few micro-seconds, and the energy detection mechanism in a $250\ Kbps$ system should be also in the order of micro-seconds). We ran each setup 1000 times and depict the average and standard deviation of the attained results. We start by exploring the effect of the codewords' length, T on the performance. Recall that T discloses the number of sensors and messages each sensor retains, as well as the number of simultaneous transmissions the protocol supports. Accordingly, we explore the tradeoff between messages' transmission times and wasted air-time due to retransmissions, i.e., on the one hand, the larger T, the larger the transmission time, on the other hand, T reflects on the collision probability such that the larger T, the more sensors can transmit simultaneously, hence fewer retransmissions. Figures 5 and 6 depict the average latency between the time the sink transmitted the RFR and the time the messages were received successfully by the sink. Specifically, we fixed the number of contending sensors (depicted on the x-axis) and computed the average time it took all the contending sensors to transfer their messages successfully (depicted on the y-axis). In Figure 5 we adjust T according to the number of contending sensors, and in Figure 6 we kept T fixed supporting at most 5 simultaneous transmissions.

It can be seen in Figure 5 that when adjusting the codewords' length to the number of transmitting sensors, in the suggested protocol (denoted by GT-MAC) the average latency slightly grows, as the codewords' length hence the transmission time, slightly grows. However, recall that the throughput grows as well, as more sensors are transmitting concurrently. For example, in the figure, when the number of transmitting sensors is 10, means that exactly 10 sensors were transmitting simultaneously, and all their messages have been received successfully (accordingly, the latency reflects the RFR transmission time plus the message transmission time). In contrast, with RI-MAC, the larger the number of contending sensors, the longer it takes to resolve the collision, as not only the success probability drops, but also the contention windows, hence the backoff times grow. On the other hand, as can be seen in Figure 6, when keeping the codewords' length fixed and increasing the number of contending sensors, the average latency grows exponentially. This effect is due to the codewords' length not reflecting the number of sensors transmitting, and due to the utilization of a naive collision resolution procedure which assumes that the number of colliding sensors is in the proximity of the number of supported concurrent transmissions for which the code was designed for, and does not try to adopt to the temporary congestion. Specifically, in the suggested collision resolution procedure, after each RR the sensors will continue attempting to retransmit with retransmission probability of 0.5 which potentially splits the colliding group to two groups, both of which can be supported by the code, expecting to resolve the collision on the grounds that the colliding group does not exceed K by much. However, when the colliding group is greater than twice the supported group, the collision will repeat itself over and over again. For example, when the colliding group is 15 and the retransmission probability is 0.5, the retransmission success probability is $\sum_{i=1}^{5}\binom{15}{i}\cdot 0.5^i 0.5^{15-i} = 0.15$. The latency until the first success will be distributed according to a geometric distribution. Obviously, the naive approach can be easily corrected, for example by reducing the retransmission probability attempt after each successive collision, or letting the receiver (sink) determine the retransmission probability based on the number of consecutive collisions, announcing it in the transmission inviting RR. In the simulations (Figure 6) we preferred to present the naive approach in order to emphasize the effect of misestimation of the contending sensors).

Next, we varied the number of sensors in the network. We assumed that the probability that a sensor will have a message to send in each cycle is fixed (set to 0.05 in Figure 7), and the codewords' length was adjusted according to the number of sensors the number of messages each support (set to 10) and this probability. For example, in the figure, when the number of sensors is 50, the codewords' length was set to $T = \lceil 50 * 0.05 \rceil \cdot \log(50 * 10) = 16$ mini-slots. Obviously, on some cycles, the number of contending sensors will be lower or equal to the expected one and on others it will be higher, hence will result in a collision (note however that the probability that the actual number of contending sensors will dramatically exceed the expected one for which the code was designed to support, is quite low). Figure 7 clearly depicts that

Authorized licensed use limited to: Hohai University Library. Downloaded on May 08,2024 at 03:53:51 UTC from IEEE Xplore. Restrictions apply.

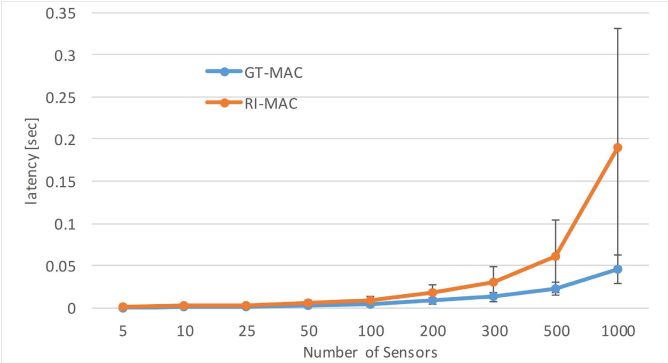

Fig. 7. Average latency between the time the sink transmitted the RFR and the time the messages were received successfully by the sink. In this scenario we increase the number of sensors in the network and adjust T according to the number of contending sensors.

the latency in the suggested protocol dramatically outperforms the one attained by the RI-MAC, especially when the number of sensors is high, which is not surprising, as in contrast to the suggested protocol which will experience little collisions, in RI-MAC the larger the number of sensors, the larger the collision probability, and the larger the probability that several sensors will be involved in the collision, hence the longer it takes to resolve the collision. Note that in addition to the superior average latency attained by the suggested protocol, also the variance of the suggested protocol is much lower than the one attained by the RI-MAC protocol. This large variance in RI-MAC is due to the aforementioned variability in the collision resolution duration. In contrast, in the suggested protocol, the collision probability is low, and even when a collision occurs, the number of colliding sensors is only slightly higher than the expected one, hence the resolution is of quite a short duration, hence the low variance.

We do not illustrate power consumption comparison of the two protocols. However, recall that the main power consumption is due to the radio operation, accordingly, significant power consumption can be gained when the sensor's radio is in "Sleep" mode (e.g., [26, Chapter 3]). Accordingly, the latency depicted in Figures 7 also reflects on the power consumption. Specifically, the lower the latency, the faster the sensors can go back to sleep, the lower their duty cycle, hence the lower their power consumption. For example, in Figure 7, when the number of sensors is 500, the average latencies are $61.104\ ms$ and $22.749\ ms$ for the RI-MAC and GT-MAC, respectively. Assuming periodic wake-up times of $1[sec]$, as suggested in the RI-MAC paper, on average sensors go back to sleep much faster in GT-MAC (on average after $.023\ sec$ in GT-MAC rather than $.061\ sec$ in RI-MAC).

It is important to note that as previously mentioned, in the MATLAB simulations presented above, there were no hidden terminals. Hidden terminals only exaggerate the difference between the two protocols, as on the one hand the suggested protocol is not affected by hidden terminals, RI-MAC is highly affected by hidden terminals, as with hidden terminals collisions are not bounded to contention slots boundaries, but can occur throughout the contention interval.

XII. Implementation

As proof of concept, the complete protocol, including the coding and decoding schemes were fully implemented on off-the-shelf devices, demonstrating on the one hand its feasibility over wireless communication and on the other hand over devices with limited power, limited memory and limited computational power. Specifically, we carried out two separate implementations, both under a complete setup of the suggested protocol and the efficient decoding algorithm based on Sections IV-VII. In the first implementation, we validated the suggested wireless protocol, utilizing GNU Radio open-source software development toolkit ([36]) with external RF hardware. In the second implementation, we utilized low cost devices to further demonstrate that the suggested protocol can operate efficiently in real time on low cost devices with highly limited capabilities (power, memory and computation limitations). Due to space limitations, we present the setup details of both implementations in Appendix F.

XIII. Conclusions

In this paper, we design a highly efficient WSN MAC protocol, to collect information from a large number of sensors. This WSN protocol is specified by a dense set of wireless sensors in the network, out of which a unknown subset may be active and transmit at the same time to a sink. To support the suggested protocol, we provided a very simple codebook construction with very simple and efficient encoding and decoding procedures. Moreover, we extend the WSN protocol suggested to a secure version, in which an eavesdropper which has access to a noisy vector from the sink output, will be kept completely ignorant regarding the subset of sensors transmitting and their messages.

To validate the efficiency, of both the non-secure and secure WSN models suggested, we provide rigorous analysis, numerical results and simulations, which illustrate how the different parameters of the network affect the performance of the protocol, namely, the rate of the wireless channel.

Acknowledgments

The authors would like to thank N. Weiss, A. Firuz (R.I.P.), T. Nagar and S. Tzirkel for contributing the hardware implementation of the suggested protocol, the related software and testing.

References

[1] J. Gubbi, R. Buyya, S. Marusic, and M. Palaniswami, "Internet of Things (IoT): A vision, architectural elements, and future directions," *Future Gener. Comput. Syst.*, vol. 29, no. 7, pp. 1645–1660, Sep. 2013.

[2] R. Rom and M. Sidi, *Multiple Access Protocols: Performance and Analysis*. New York, NY, USA: Springer-Verlag, 1990.

[3] C. Lam Chan, S. Jaggi, V. Saligrama, and S. Agnihotri, "Non-adaptive group testing: Explicit bounds and novel algorithms," *IEEE Trans. Inf. Theory*, vol. 60, no. 5, pp. 3019–3035, May 2014.

[4] J. Polastre, J. Hill, and D. Culler, "Versatile low power media access for wireless sensor networks," in *Proc. 2nd Int. Conf. Embedded Netw. Sensor Syst.*, 2004, pp. 95–107.

[5] W. Ye, J. Heidemann, and D. Estrin, "An energy-efficient MAC protocol for wireless sensor networks," in *Proc. 21st Annu. Joint Conf. IEEE Comput. Commun. Soc.*, vol. 3, Jun. 2002, pp. 1567–1576.

[6] P. Huang, L. Xiao, S. Soltani, M. W. Mutka, and N. Xi, "The evolution of MAC protocols in wireless sensor networks: A survey," *IEEE Commun. Surveys Tuts.*, vol. 15, no. 1, pp. 101–120, 1st Quart., 2013.

[7] J. Lin and M. A. Ingram, "SCT-MAC: A scheduling duty cycle MAC protocol for cooperative wireless sensor network," in *Proc. IEEE Int. Conf. Commun. (ICC)*, Jun. 2012.

[8] C.-J. Liu, P. Huang, and L. Xiao, "TAS-MAC: A traffic-adaptive synchronous MAC protocol for wireless sensor networks," *ACM Trans. Sensor Netw.*, vol. 12, no. 1, p. 1, 2016.

Authorized licensed use limited to: Hohai University Library. Downloaded on May 08,2024 at 03:53:51 UTC from IEEE Xplore. Restrictions apply.

[9] A. Kakria and T. C. Aseri, "Survey of synchronous MAC protocols for wireless sensor networks," in *Proc. Recent Adv. Eng. Comput. Sci. (RAECS)*, Mar. 2014, pp. 1–4.

[10] M. Buettner, G. V. Yee, E. Anderson, and R. Han, "X-MAC: A short preamble MAC protocol for duty-cycled wireless sensor networks," in *Proc. 4th Int. Conf. Embedded Netw. Sensor Syst. (SenSys)*, 2006.

[11] Y. Sun, O. Gurewitz, and D. B. Johnson, "RI-MAC: A receiver-initiated asynchronous duty cycle MAC protocol for dynamic traffic loads in wireless sensor networks," in *Proc. 6th ACM Conf. Embedded Netw. Sensor Syst. (SenSys)*, 2008, pp. 1–14.

[12] L. Tang, Y. Sun, O. Gurewitz, and D. B. Johnson, "EM-MAC: A dynamic multichannel energy-efficient MAC protocol for wireless sensor networks," in *Proc. 12th ACM Int. Symp. Mobile Ad Hoc Netw. Comput. (MobiHoc)*, 2011, p. 23.

[13] T.-Y. Tsai, W.-C. Lan, C. Liu, and M.-T. Sun, "Distributed compressive data aggregation in large-scale wireless sensor networks," *J. Adv. Comput. Netw.*, pp. 295–300, Oct. 2013.

[14] G. Dhand and S. S. Tyagi, "Data aggregation techniques in WSN: Survey," *Procedia Comput. Sci.*, vol. 92, pp. 378–384, Jan. 2016.

[15] S. Boubiche, D. E. Boubiche, A. Bilami, and H. Toral-Cruz, "Big data challenges and data aggregation strategies in wireless sensor networks," *IEEE Access*, vol. 6, pp. 20558–20571, 2018.

[16] R. Dorfman, "The detection of defective members of large populations," *Ann. Math. Statist.*, vol. 14, no. 4, pp. 436–440, Dec. 1943.

[17] D.-Z. Du and F. K. Hwang, *Combinatorial Group Testing and Its Applications*. Singapore: World Scientific, 1999, vol. 12.

[18] A. J. Macula, "Probabilistic nonadaptive group testing in the presence of errors and DNA library screening," *Ann. Combinatorics*, vol. 3, no. 1, pp. 61–69, 1999.

[19] S. Wu, S. Wei, Y. Wang, R. Vaidyanathan, and J. Yuan, "Partition information and its transmission over boolean multi-access channels," *IEEE Trans. Inf. Theory*, vol. 61, no. 2, pp. 1010–1027, Feb. 2015.

[20] S. Wu, S. Wei, Y. Wang, R. Vaidyanathan, J. Yuan, and X. Wang, "Detection of graph structures via communications over a multiaccess Boolean channel," in *Proc. IEEE Int. Symp. Inf. Theory (ISIT)*, Jun. 2015, pp. 2553–2557.

[21] M. L. Malloy and R. D. Nowak, "Near-optimal adaptive compressed sensing," *IEEE Trans. Inf. Theory*, vol. 60, no. 7, pp. 4001–4012, Jul. 2014.

[22] A. De Bonis and U. Vaccaro, "ϵ-almost selectors and their applications to multiple-access communication," *IEEE Trans. Inf. Theory*, vol. 63, no. 11, pp. 7304–7319, Nov. 2017.

[23] C. Aksoylar, G. K. Atia, and V. Saligrama, "Sparse signal processing with linear and nonlinear observations: A unified Shannon-theoretic approach," *IEEE Trans. Inf. Theory*, vol. 63, no. 2, pp. 749–776, Feb. 2017.

[24] V. Y. F. Tan and G. K. Atia, "Strong impossibility results for sparse signal processing," *IEEE Signal Process. Lett.*, vol. 21, no. 3, pp. 260–264, Mar. 2014.

[25] L. Tang, Y. Sun, O. Gurewitz, and D. B. Johnson, "PW-MAC: An energy-efficient predictive-wakeup MAC protocol for wireless sensor networks," in *Proc. IEEE INFOCOM*, Apr. 2011, pp. 1305–1313.

[26] I. F. Akyildiz, W. Su, Y. Sankarasubramaniam, and E. Cayirci, "Wireless sensor networks: A survey," *Comput. Netw.*, vol. 38, no. 4, pp. 393–422, 2002.

[27] G. K. Atia and V. Saligrama, "Boolean compressed sensing and noisy group testing," *IEEE Trans. Inf. Theory*, vol. 58, no. 3, pp. 1880–1901, Mar. 2012.

[28] A. Cohen, A. Cohen, S. Jaggi, and O. Gurewitz, "Secure group testing," 2016, *arXiv:1607.04849*. [Online]. Available: https://arxiv.org/abs/1607.04849

[29] M. Sudan, "Coding theory: Tutorial & survey," in *Proc. 42nd IEEE Symp. Found. Comput. Sci.*, Oct. 2001, pp. 36–53.

[30] T. V. Bui, M. Kuribayashi, T. Kojima, R. Haghvirdinezhad, and I. Echizen, "Efficient (nonrandom) construction and decoding for non-adaptive group testing," *J. Inf. Process.*, vol. 27, no. 3, pp. 245–256, 2019.

[31] R. G. Gallager, *Information Theory and Reliable Communication*, vol. 2. Vienna, Austria: Springer, 1968.

[32] D. Sejdinovic and O. Johnson, "Note on noisy group testing: Asymptotic bounds and belief propagation reconstruction," in *Proc. 48th Annu. Allerton Conf. Commun., Control, Comput. (Allerton)*, Sep. 2010, pp. 998–1003.

[33] J. Scarlett and V. Cevher, "Converse bounds for noisy group testing with arbitrary measurement matrices," in *Proc. IEEE Int. Symp. Inf. Theory (ISIT)*, Jul. 2016, pp. 2868–2872.

[34] S. P. Singh and S. C. Sharma, "A survey on cluster based routing protocols in wireless sensor networks," *Procedia Comput. Sci.*, vol. 45, pp. 687–695, Jan. 2015.

[35] A. El-Hoiydi and J.-D. Decotignie, "WiseMAC: An ultra low power MAC protocol for multi-hop wireless sensor networks," in *Proc. Int. Symp. Algorithms Exp. Sensor Syst., Wireless Netw. Distrib. Robot.* Berlin, Germany: Springer, 2004, pp. 18–31.

[36] G. R. Software. (2018). *GNURadio: The Free and Open Software Radio Ecosystem*. [Online]. Available: https://www.gnuradio.org/

[37] M. Bloch and J. Barros, *Physical-Layer Security: From Information Theory to Security Engineering*. Cambridge, U.K.: Cambridge Univ. Press, 2011.

[38] A. Cohen, A. Cohen, and O. Gurewitz, "Secure group testing," in *Proc. IEEE Int. Symp. Inf. Theory (ISIT)*, Jul. 2016, pp. 1391–1395.

[39] C. Cox, *An Introduction to LTE: LTE, LTE-Advanced, SAE and 4G Mobile Communications*. Hoboken, NJ, USA: Wiley, 2012.

[40] Cisco. (2017). *Wireless Fundamentals: SNR and Wireless Signal Strength*. [Online]. Available: https://documentation.meraki.com/MR/

Alejandro Cohen (Member, IEEE) received the B.Sc. degree from the Department of Electrical Engineering, SCE College of Engineering, Israel, in 2010, and the M.Sc. and Ph.D. degrees from the Department of Communication Systems Engineering, Ben-Gurion University of the Negev, Israel, in 2013 and 2018, respectively. From 2007 to 2014, he was with the DSP Group, where he worked on voice enhancement and signal processing. From 2014 to 2019, he was with Intel, where he worked as a Research Scientist with the Innovation Group, Mobile and Wireless. He is currently a Post-Doctoral Associate with the Department of Electrical Engineering and Computer Science (EECS), Massachusetts Institute of Technology (MIT). His areas of interest are information theory, signal processing, and networks. In particular, he is also interested in wireless communication, security, network information theory and network coding, anomaly detection, coding, computation in networks, and speech enhancement.

Asaf Cohen (Member, IEEE) received the B.Sc. and M.Sc. degrees (Hons.) and the Ph.D. degree from the Department of Electrical Engineering, Technion, Israel Institute of Technology, in 2001, 2003, and 2007, respectively. He was a Post-Doctoral Scholar with the California Institute of Technology (Caltech). From 1998 to 2000, he was with the IBM Research Laboratory, Haifa, where he worked on distributed computing. He is currently a Senior Lecturer with the Department of Communication Systems Engineering, Ben-Gurion University of the Negev, Israel. His areas of interest are information theory, learning, and coding. In particular, he is also interested in sequential decision making, with applications to detection and estimation, network security and anomaly detection, network information theory and network coding, statistical signal processing, coding theory, and performance analysis of codes. He received several honors and awards, including the Viterbi Post-Doctoral Scholarship, the Student Paper Award at the IEEE Israel 2006 and the Dr. Philip Marlin Prize for Computer Engineering in 2000.

Omer Gurewitz (Member, IEEE) received the B.Sc. degree in physics from Ben Gurion University, Beer Sheva, Israel, in 1991, and the M.Sc. and Ph.D. degrees in electrical engineering from the Technion Israel Institute of Technology, Haifa, Israel, in 2000 and 2005, respectively. He is currently an Assistant Professor with the Department of Communication Systems Engineering, Ben-Gurion University. From 2005 to 2007, he was a Post-doctoral Researcher with the Electrical and Computer Engineering (ECE) Department, Rice University, Houston, TX, USA. His research interests are in the field of performance evaluation of wired and wireless communication networks. His current projects include cross-layer design and implementation of medium access protocols for next generation wireless communication.

Authorized licensed use limited to: Hohai University Library. Downloaded on May 08,2024 at 03:53:51 UTC from IEEE Xplore. Restrictions apply.